REVISIONS				
ZONE	REV	DESCRIPTION	DATE	APPROVED
	0	ORIGINAL	6/1/13	TEW
	1	Add REPO Note, Modify Scope	8/23/13	TEW

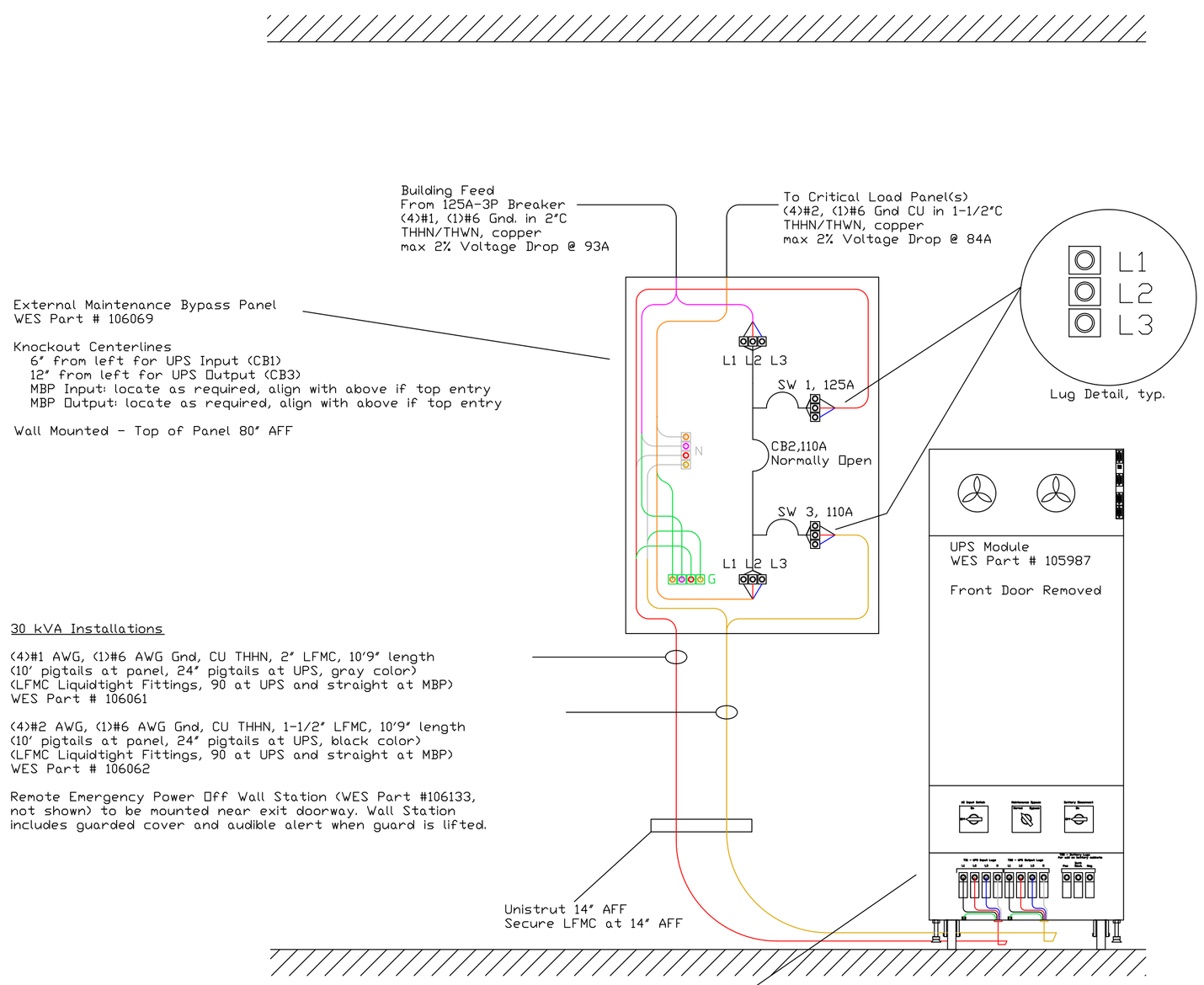

Front View

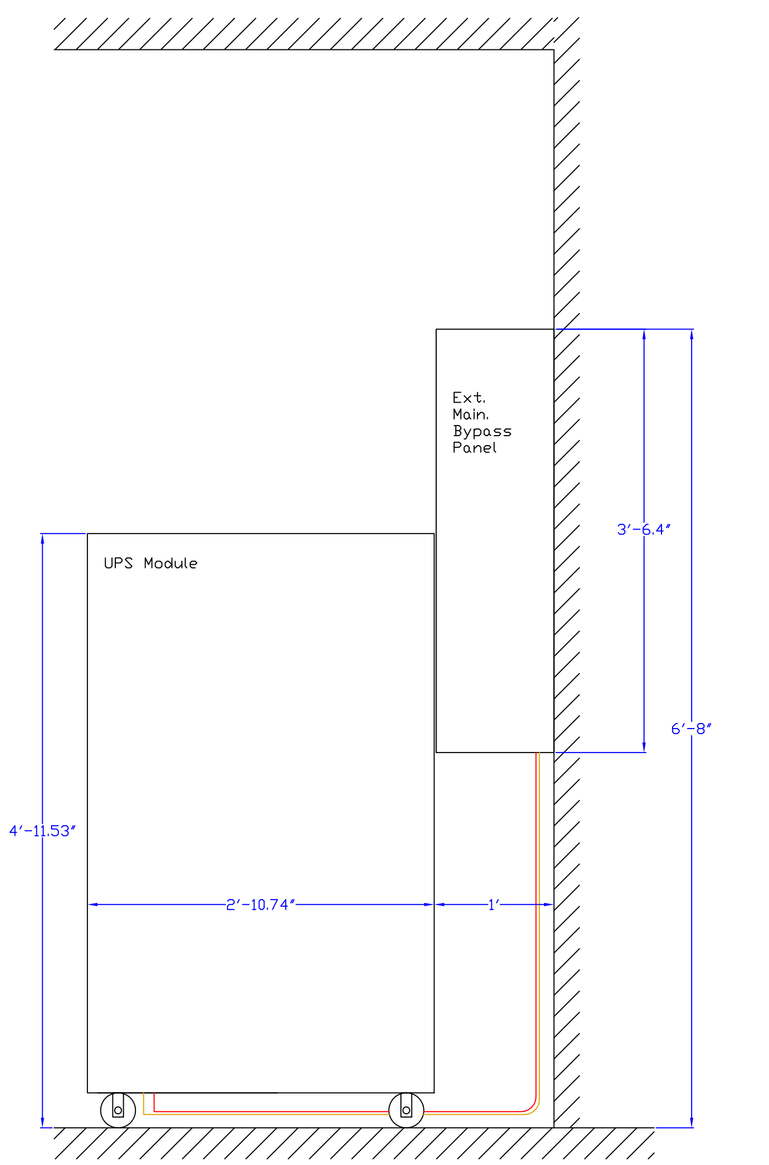

Side View

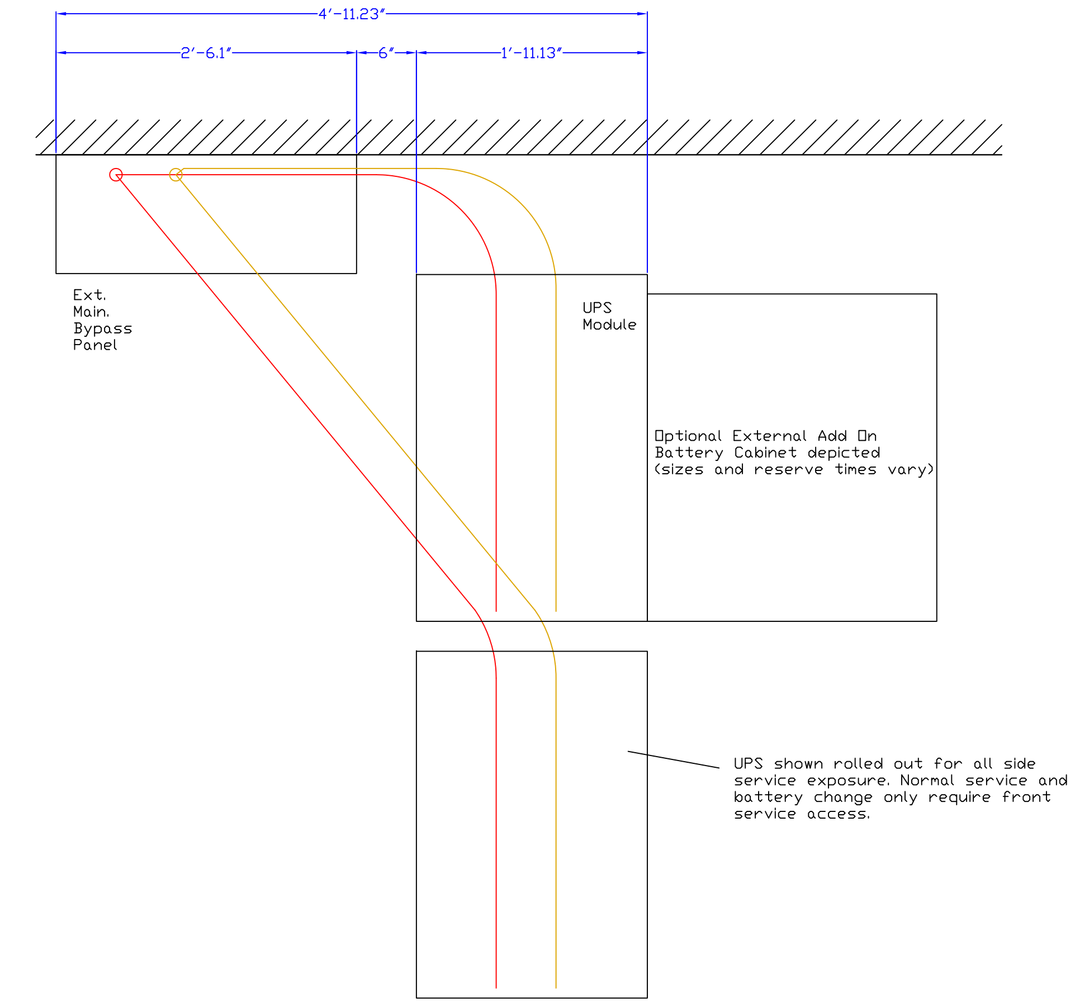

Top View

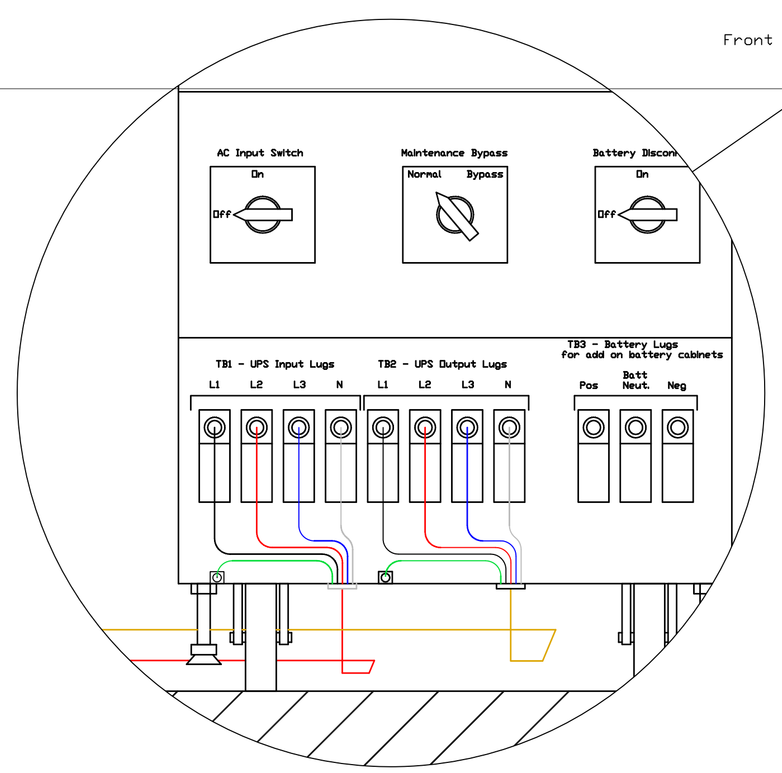

UPS Connections Detail

UPS Specifications	
Output kVA	30 kVA
Output kW	27 kW
Input Voltage	120/208/3, 4W + G
Input Voltage Tolerance	177 to 239 VAC
Input Current THD	1% Full load, 2% Half Load
Input Frequency Range	43 to 67 Hz
Output Voltage	120/208/3, 4W + G
Output Voltage THD	2%
Overload Capability (on inverter)	300% for 10 seconds
Rectifier Type	7.5 kHz IGBT
Inverter Type	7.5 kHz IGBT
Battery Type	VRLA, 432 VDC
Internal Battery Reserve Time	9 minutes
Power Paths	Main, static, internal MBP, external MBP
Warranty	2 Years
PMs during Warranty	1 / year
Heat Rejection	9100 BTU/Hr
Audible Noise	54 dBA @ 3'
On Board Controller	Color LCD, Graphical
Web/SNMP Enabled	Yes
Alarm Contacts	Yes, 6 programmable
Modbus Communications	Yes

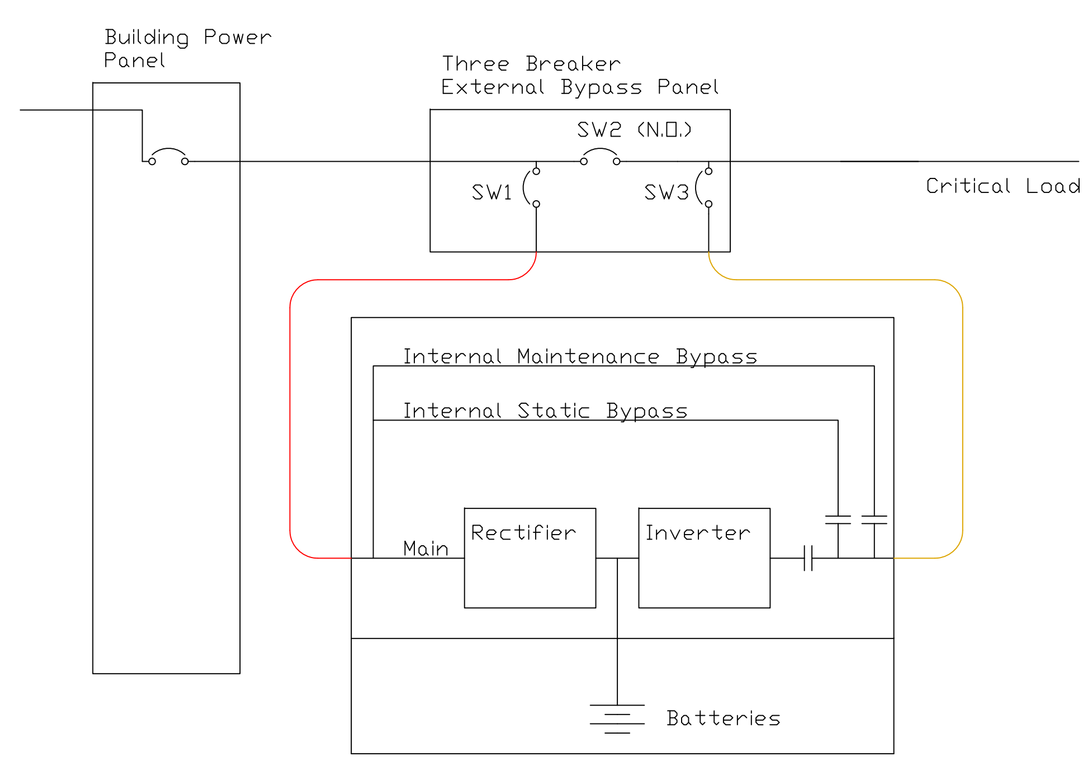

EC Installation Scope

1) Provide Feed Breaker and Circuit to MBP Panel
2) Provide Load Panel(s), not shown
3) Provide Circuit from MBP Panel to Load Panel(s)
4) Mount MBP Panel and Unistrut below MBP
5) Connect (2) LFMC to MBP and UPS
6) All conductors to be copper
7) Maintain phasing throughout - Mark each conductor at both ends prior to pulling.

WES Scope

1) Provide MBP, (2) LFMC, UPS, REPO
2) Deliver and set in place UPS module
3) Provide and install batteries into UPS
4) Mount and connect REPO
5) Check, test and startup UPS
6) Provide PMs during warranty

Note

1) Circuit sizing is based upon specific UPS proposed by Wilson Engineered Systems and may not reflect alternate UPS systems which may require different and larger wiring.

THIS DRAWING CONTAINS CONFIDENTIAL & PROPRIETARY INFORMATION AND SHALL NOT BE DISCLOSED OR COPIED WITHOUT THE EXPRESS WRITTEN PERMISION OF WILSON ENGINEERED SYSTEMS, INC.

Wilson Engineered Systems, Inc.
11501 Columbia Park Drive West, Bldg 100
Jacksonville, FL 32258

30 kVA/ 27 kW UPS
120/208 3 Phase
Installation Details

STATUS	SIZE	PROJECT NO.	DWG NO.	REV
FOR INFORMATION ONLY NOT FOR CONSTRUCTION	D	----	W-100519 (30)	1
	SCALE	-	SHEET	4